KStrong® Permanent Use Stainless Steel 17” Roof Anchor with 1 Forged D-ring (ANSI)

Model: UFA30021

DESIGN

- An ideal anchorage device to be fixed on wooden beams used in roofing.
- Consists of one stainless steel base plate having 10 holes which can be fixed on wooden beams by means of nails inserted in the holes.
- Stamped D-ring at one side, can be used safely as an anchorage point.

MATERIAL

Base Plate: Stainless Steel
D-Ring: High strength alloy steel

FINISH

Base Plate: Electro-polished/E Coated
D-Ring: Zinc Plated Golden Yellow/Silver Passivation

MINIMUM BREAKING STRENGTH

5000 lbs. (2268 kg)

OPENING OF D-RING

1.7”

WEIGHT

0.79 lbs. ± 0.02 lbs. (358 gm ± 10 gm)

RELEVANT STANDARDS
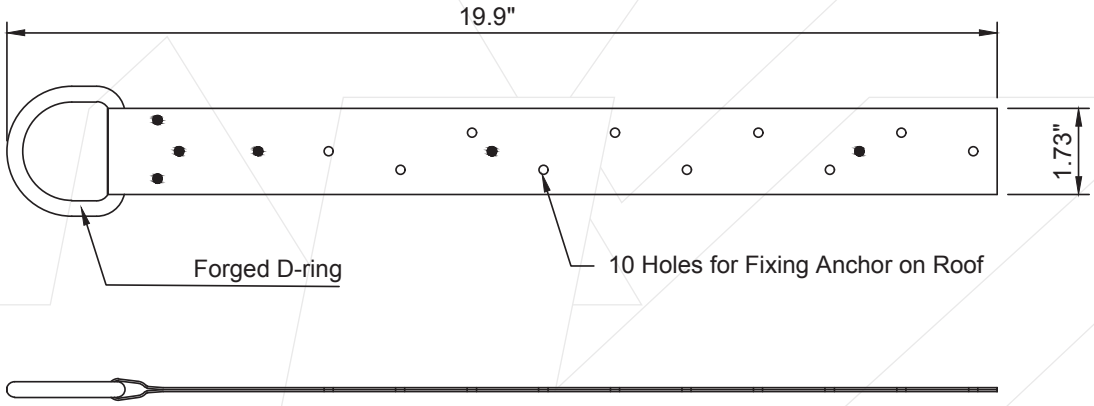
Meets or Exceeds ANSI Z359.18-2017